Journal Geuthee of Engineering and Energy (JOGE)
Vol. 5, No. 1, May 2026, pp. 62 - 70
ISSN: 2964-2655, DOI: 10.52626/joge.v5i1.94

Short circuit current limitation using series reactors in 20 kV distribution feeder

Ramdhan Halid Siregar[1]*, Alwan Farras[2], Syahrizal[3]
[1,2,3]Departemen Teknik Elektro dan Komputer, Fakultas Teknik, Universitas Syiah Kuala, Banda Aceh, Indonesia

Corresponding Author: ramdhan@usk.ac.id

ABSTRACT

Short-circuit faults in power distribution systems generate excessive fault currents that can damage electrical equipment and reduce system reliability. One practical method for limiting fault current is the installation of a series reactor or current limiting reactor (CLR). This study analyzes short-circuit current characteristics in the 20 kV Ulee Kareng distribution feeder in Banda Aceh and evaluates the effectiveness of a series reactor in reducing fault current levels. The analysis was performed using ETAP 19.0.1 simulation software based on the IEC 60909 standard. Four fault types were investigated: three-phase, single line-to-ground, line-to-line, and double line-to-ground faults. The simulation results show that the maximum three-phase short-circuit current before reactor installation was 4.066 kA at bus LBU 01-00, while the minimum value was 2.732 kA at bus LBU 42-00. A series reactor with a reactance value of 3.12 Ω was designed to achieve approximately 50% current reduction. After installation, the three-phase short-circuit current at bus LBU 01-00 decreased to 2.103 kA, corresponding to a 48% reduction. The results confirm that the series reactor effectively reduces fault current levels and improves protection system performance without replacing existing circuit breakers. The novelty of this study lies in the evaluation of series reactor performance for all fault types in the actual 20 kV Ulee Kareng distribution feeder using IEC 60909-based ETAP simulations under real operating conditions.

Keywords: short-circuit current limitation, series reactor, distribution feeder, ETAP, IEC 60909

ABSTRAK

Gangguan hubung singkat pada sistem distribusi tenaga listrik menghasilkan arus gangguan yang besar sehingga dapat merusak peralatan listrik dan menurunkan keandalan sistem. Salah satu metode yang efektif untuk membatasi arus hubung singkat adalah pemasangan reaktor seri atau current limiting reactor (CLR). Penelitian ini menganalisis karakteristik arus hubung singkat pada jaringan distribusi 20 kV penyulang Ulee Kareng di Banda Aceh serta mengevaluasi efektivitas reaktor seri dalam mereduksi arus gangguan. Analisis dilakukan menggunakan perangkat lunak ETAP 19.0.1 berdasarkan standar IEC 60909. Empat jenis gangguan dianalisis, yaitu gangguan tiga fasa, satu fasa ke tanah, dua fasa, dan dua fasa ke tanah. Hasil simulasi menunjukkan bahwa arus hubung singkat tiga fasa maksimum sebelum pemasangan reaktor sebesar 4,066 kA pada bus LBU 01-00, sedangkan nilai minimum sebesar 2,732 kA pada bus LBU 42-00. Reaktor seri dengan nilai reaktansi sebesar 3,12 Ω dirancang untuk menghasilkan reduksi arus sekitar 50%. Setelah pemasangan reaktor, arus hubung singkat tiga fasa pada bus LBU 01-00 menurun menjadi 2,103 kA atau berkurang sebesar 48%. Hasil penelitian menunjukkan bahwa reaktor seri efektif dalam menurunkan arus hubung singkat serta meningkatkan kinerja sistem proteksi tanpa perlu mengganti pemutus tenaga yang telah ada. Kebaruan penelitian ini terletak pada evaluasi kinerja reaktor seri untuk seluruh jenis gangguan pada penyulang distribusi 20 kV Ulee Kareng menggunakan simulasi ETAP berbasis IEC 60909 dengan mempertimbangkan kondisi operasi nyata sistem distribusi.

Kata kunci: pembatasan arus hubung singkat, reaktor seri, penyulang distribusi, ETAP, IEC 60909

Manuscript received 24 May. 2026; revised 26 May 2026; accepted 28 May. 2026
Journal Geuthee of Engineering and Energy is licensed under a Creative Commons Attribution-Share Alike 4.0 International License.

1. INTRODUCTION

Electric power systems consist of generation, transmission, and distribution subsystems that operate together to deliver electrical energy reliably to consumers. The 20 kV medium-voltage distribution network plays an important role because it is directly connected to customer loads. The continuous growth of electricity demand and the expansion of distribution networks have increased short-circuit current levels in modern power systems [1].

Short-circuit faults are among the most common disturbances in electric power distribution systems. These faults may occur due to insulation failure, equipment damage, operational errors, lightning strikes, or external disturbances such as tree branches and extreme weather conditions [2]. Excessive short-circuit currents can damage transformers, conductors, insulators, and other electrical equipment, while also reducing system stability and reliability.

In distribution systems, circuit breakers function as the main protection devices to interrupt fault currents. However, increasing short-circuit current levels may exceed the interrupting capacity of existing circuit breakers. Replacing circuit breakers with higher-capacity units requires significant investment costs; therefore, more economical alternatives are needed to maintain system protection performance [3].

One practical solution for limiting short-circuit currents is the installation of a series reactor or current limiting reactor (CLR). A series reactor increases system impedance, thereby reducing fault current levels without changing the main configuration of the power system [4]. Previous studies have reported that series reactors and fault current limiters can effectively reduce short-circuit currents and improve protection coordination in distribution systems [5], [11]–[13]. In addition, short-circuit analysis based on the IEC 60909 standard has been widely applied in power system studies because it provides a reliable method for calculating fault currents under various operating conditions [6]–[9].

However, most previous studies mainly focused on general distribution systems, substations, or theoretical evaluations of fault current limitation methods. Research discussing the implementation of series reactors under actual operating conditions in the 20 kV Ulee Kareng distribution feeder in Banda Aceh is still limited. Furthermore, comprehensive evaluations covering all fault types, including three-phase, single line-to-ground, line-to-line, and double line-to-ground faults, have not been widely reported for this distribution feeder.

Therefore, this study aims to analyze short-circuit current characteristics in the Ulee Kareng feeder using ETAP 19.0.1 simulations based on the IEC 60909 standard and to evaluate the effectiveness of a series reactor in reducing fault currents for various fault conditions. The main contribution of this study lies in demonstrating a practical and cost-effective short-circuit current limitation approach using a series reactor in an actual medium-voltage distribution system. The results of this study are expected to provide technical insights for improving protection system reliability and reducing the need for circuit breaker replacement in electrical power distribution networks.

2. RESEARCH METHOD

3. Data Collection

The research data were obtained from PT PLN (Persero) Aceh Regional Office, Banda Aceh. The data used in this study included system short-circuit MVA data, conductor length data, conductor type data, load data, and the single-line diagram of the Ulee Kareng feeder.

The three-phase short-circuit current at the Ulee Kareng switching substation was known to be 4.092 kA; therefore, the short-circuit MVA capacity was calculated using the following equation:

$$MVA_{hs3\Phi} = \sqrt{3} \times V \times I \quad [1]$$

With a system voltage of 20 kV, the following result was obtained:

$$MVA_{hs3\Phi} = \sqrt{3} \times 20\ kV \times 4.092\ kA = 141.75\ MVA$$

The Ulee Kareng feeder consists of 14 fault locations with distances ranging from 0.9 km to 4.93 km from the switching substation. The fault locations and feeder lengths are presented in Table 1.

Table 1. Fault Locations and Feeder Lengths of the Ulee Kareng Feeder

No	Bus	Distance (km)	Conductor type
1	LBU 01-00	0.9	AAAC & XLPE
2	LBU 05-01	2.6	AAAC
3	LBU 06-00	3.1	AAAC
4	LBU 07-00	2.75	AAAC
5	LBU 10-00	1.03	AAAC
6	LBU 12-00	1.4	AAAC
7	LBU 16-00	1.9	AAAC
8	LBU 22-00	2.98	AAAC
9	LBU 26-00	3.0	AAAC
10	LBU 32-00	3.8	AAAC
11	LBU 34-00	4.11	AAAC
12	LBU 36-00	4.43	AAAC
13	LBU 41-00	4.6	AAAC
14	LBU 42-00	4.93	AAAC

2.2 System Modeling and Simulation

The system single-line diagram was modeled using ETAP software. The parameters entered into the simulation included the voltage source, system impedance, conductor type, conductor length, and distribution system load data.

The short-circuit analysis was carried out based on the IEC 60909 standard for four types of faults, namely:

* Three-phase fault
* Single line-to-ground fault
* Line-to-line fault
* Double line-to-ground fault

The simulations were performed under two conditions, namely before the installation of the series reactor and after the installation of the series reactor.

The short-circuit current calculations were conducted in accordance with the IEC 60909 standard, which is widely used in modern power system studies [7].

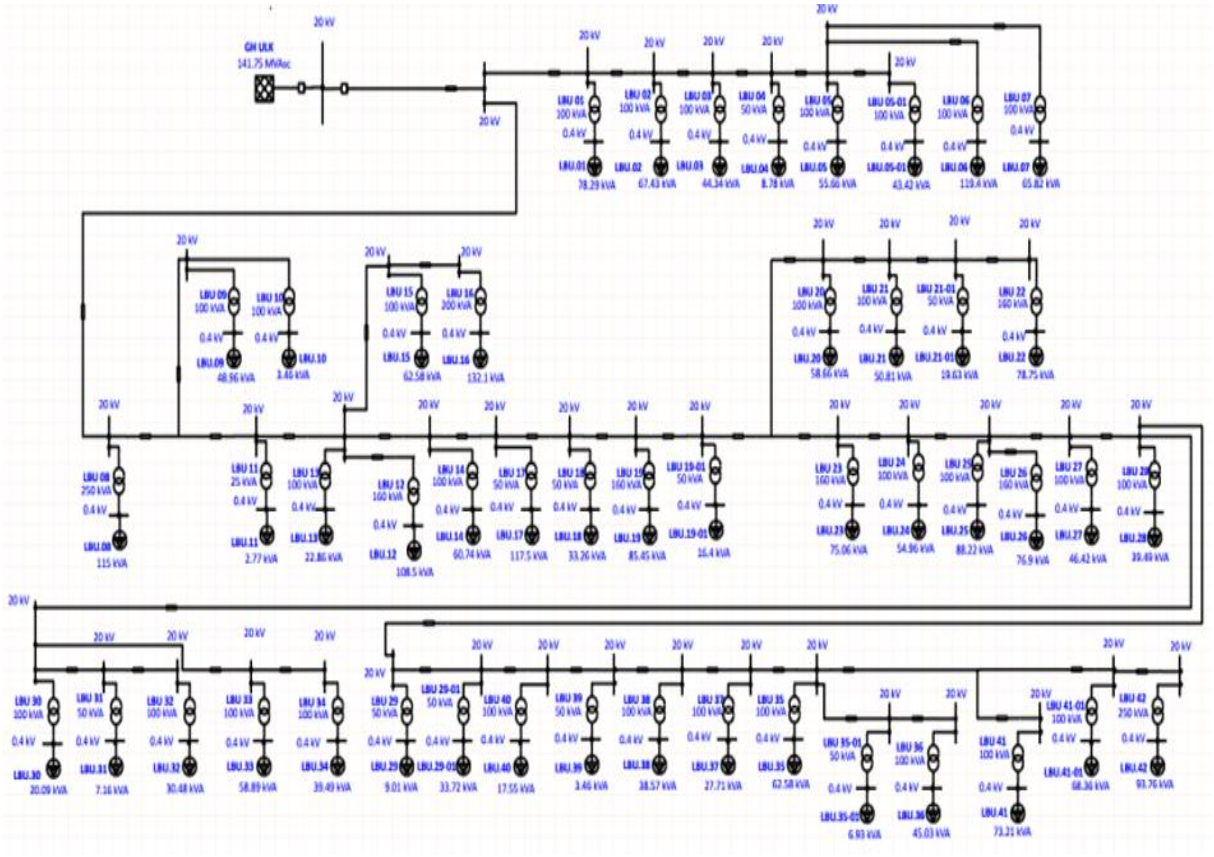

Figure 1. Single-Line Diagram of the Ulee Kareng Feeder

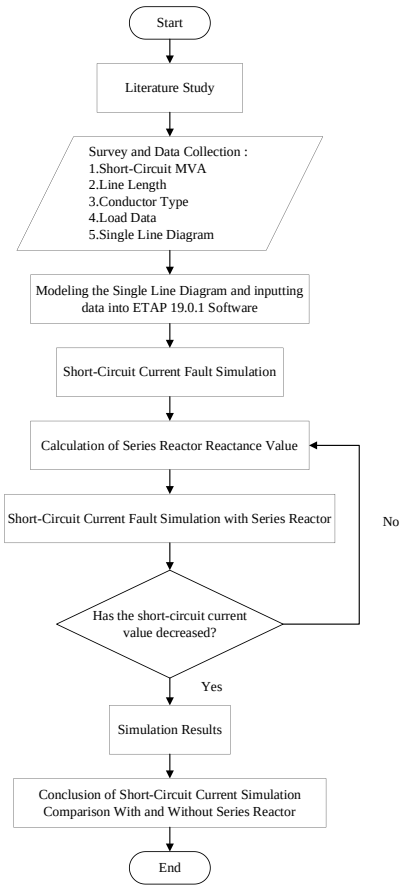

Figure 2. Research Methodology Flowchart

2.3 Series Reactor Calculation

The reactance value of the series reactor was determined based on the IEC 60909 standard using the following equation [1]:

$$X_R = \frac{cE}{\sqrt{3}}\left[\frac{1}{I_{scb}} - \frac{1}{I_{sca}}\right] \quad [2]$$

where XR is the reactor reactance (Ω), E is the nominal system voltage (V), c is the voltage factor according to the IEC 60909 standard (c=1.1 for medium-voltage systems), Isca is the three-phase short-circuit current before reactor installation (kA), and I_{scb} is the target short-circuit current after reactor installation (kA). The current reduction target was set at 50% of the maximum current value at bus LBU 01-00:

$$I_{scb} = 50\% \times 4.066 \text{ kA} = 2.033 \text{ kA} \quad [3]$$

$$X_R = \frac{1.1 \times 20.000}{\sqrt{3}}\left[\frac{1}{2.033} - \frac{1}{4.066}\right] = 12.701 \times 0.2459 = 3.12\Omega \quad [4]$$

The series reactor with a reactance value of 3.12 Ω was then installed at the outgoing feeder of the Ulee Kareng switching substation, specifically after the circuit breaker, as shown in Figure 3.

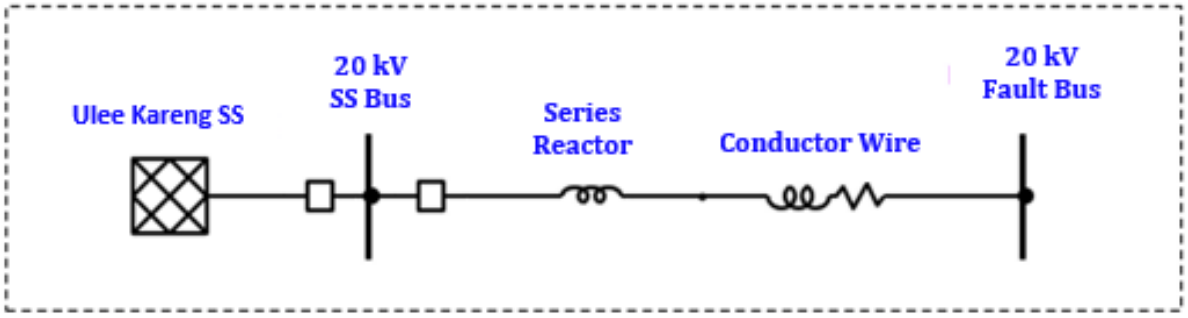

Figure 3. Single-Line Diagram with Series Reactor

3. RESULT AND DISCUSSION

3.1 Short-Circuit Current Before Reactor Instalation

The ETAP simulation results for all fault types at the 14 buses of the Ulee Kareng feeder are presented in Table 2. The three-phase short-circuit current was the highest at each fault location, followed by double line-to-ground fault current, single line-to-ground fault current, and line-to-line fault current.

Table 2. Short-Circuit Current Values Without Series Reactor (kA)

No	Bus	Distance (km)	3Φ (kA)	2Φ (kA)	2Φ-G (kA)	1Φ-G (kA)
1	LBU 01-00	0.9	4.066	3.522	4.034	3.979
2	LBU 05-01	2.6	3.369	2.917	3.220	2.863
3	LBU 06-00	3.1	3.165	2.741	3.024	2.613
4	LBU 07-00	2.75	3.297	2.850	3.147	2.769
5	LBU 10-00	1.03	3.953	3.423	3.863	3.742
6	LBU 12-00	1.4	3.806	3.297	3.669	3.478
7	LBU 16-00	1.9	3.649	3.160	3.476	3.192
8	LBU 22-00	2.98	3.238	2.804	3.071	2.644

No	Bus	Distance (km)	3Φ (kA)	2Φ (kA)	2Φ-G (kA)	1Φ-G (kA)
9	LBU 26-00	3.0	3.279	2.840	3.097	2.664
10	LBU 32-00	3.8	3.059	2.649	2.881	2.385
11	LBU 34-00	4.11	2.957	2.561	2.788	2.277
12	LBU 36-00	4.43	2.870	2.485	2.708	2.183
13	LBU 41-00	4.6	2.827	2.449	2.669	2.140
14	LBU 42-00	4.93	2.732	2.366	2.582	2.046

The highest short-circuit current occurred at bus LBU 01-00 (0.9 km from the switching substation) with a three-phase fault current of 4.066 kA, while the lowest value occurred at bus LBU 42-00 (4.93 km) with a three-phase fault current of 2.732 kA and a single line-to-ground fault current of 2.046 kA. This difference is caused by the conductor impedance, which is directly proportional to the feeder length; the farther the fault location from the voltage source, the greater the equivalent impedance and the smaller the short-circuit current [2]. The simulation results exhibit characteristics consistent with power system stability and protection theory [8], [9].

A deviation from the general trend occurred at bus LBU 10-00 (1.03 km), which had a higher current value than bus LBU 05-01 (2.6 km) because it is located closer to the switching substation. The distribution graph of the four types of short-circuit currents is presented in Figure 4.

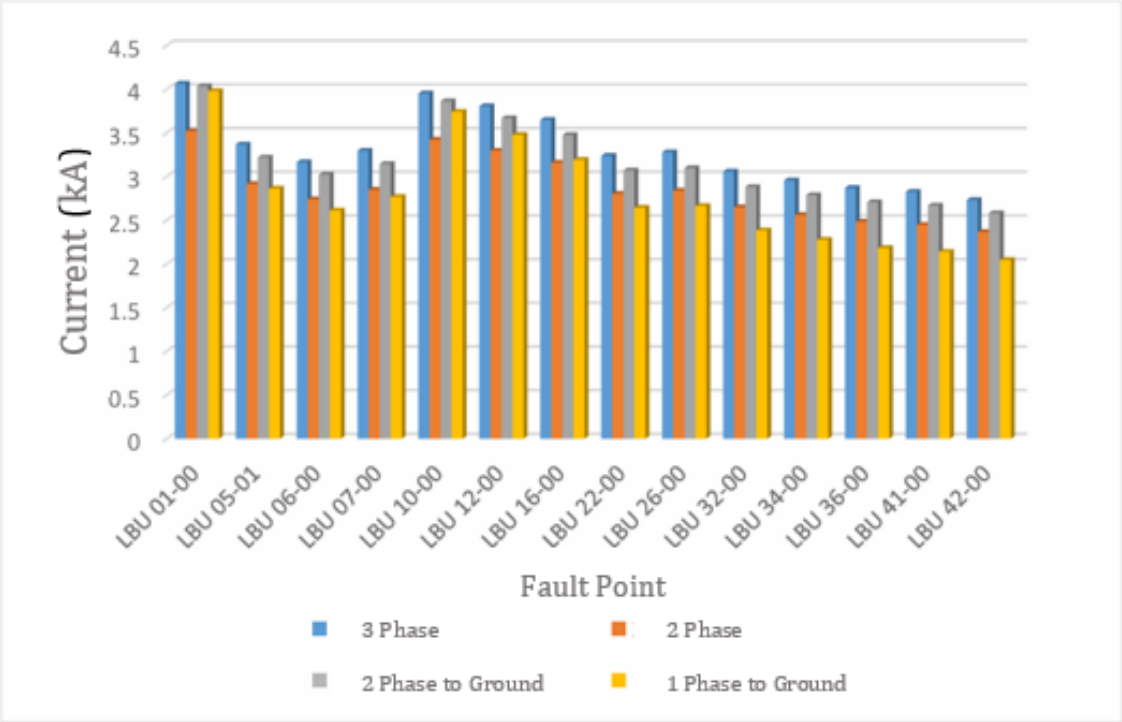

Figure 4. Short Circuit Current Graph for All Types of Faults

3.2. Short-Circuit Current After Reactor Instalation

After the series reactor with a reactance value of 3.12 Ω was installed on the feeder side, the simulations were repeated for all four types of faults. Table 3 summarizes the comparison of short-circuit currents before and after the installation of the series reactor for three-phase faults and single line-to-ground faults.

Table 3. Comparison of Short-Circuit Currents Before and After Series Reactor Installation

No	Bus	3Φ Initial (kA)	3Φ Reactor (kA)	Reduction (%)	1Φ-G Initial (kA)	1Φ-G Reactor (kA)	Reduction (%)
1	LBU 01-00	4.066	2.103	48%	3.979	2.058	48%
2	LBU 05-01	3.369	1.917	43%	2.863	1.726	40%
3	LBU 06-00	3.165	1.858	41%	2.613	1.636	37%
4	LBU 07-00	3.297	1.895	43%	2.769	1.694	39%
5	LBU 10-00	3.953	2.074	48%	3.742	1.995	47%
6	LBU 12-00	3.806	2.037	46%	3.478	1.920	45%
7	LBU 16-00	3.649	1.992	45%	3.192	1.830	43%
8	LBU 22-00	3.238	1.879	42%	2.644	1.645	38%
9	LBU 26-00	3.279	1.889	42%	2.664	1.651	38%
10	LBU 32-00	3.059	1.819	41%	2.385	1.542	35%
11	LBU 34-00	2.957	1.787	40%	2.277	1.498	34%
12	LBU 36-00	2.870	1.758	39%	2.183	1.459	33%
13	LBU 41-00	2.827	1.744	38%	2.140	1.440	33%
14	LBU 42-00	2.732	1.711	37%	2.046	1.398	32%

The installation of the series reactor successfully reduced the three-phase short-circuit current consistently across all buses. The highest reduction was achieved at bus LBU 01-00 with a reduction of 48% (from 4.066 kA to 2.103 kA), while the lowest reduction occurred at bus LBU 42-00 with a reduction of 37% (from 2.732 kA to 1.711 kA). The reduction values did not reach the 50% target at buses located farther from the switching substation because the conductor impedance had already become relatively large before the addition of the reactor. As a result, the contribution of the reactor impedance became smaller relative to the total feeder impedance.

For single line-to-ground faults, the current reduction was more varied (32%–48%) because this type of fault involves zero-sequence impedance, which differs from positive-

sequence impedance. Bus LBU 42-00 only achieved a 32% reduction, which was the lowest among all fault types. A similar pattern was observed for line-to-line faults (37%–48% reduction) and double line-to-ground faults (37%–48% reduction).

These results indicate that the series reactor is most effective in limiting faults occurring near the switching substation (buses LBU 01-00 and LBU 10-00), where the conductor impedance is still relatively small, making the contribution of the reactor reactance more dominant. The comparison graph of three-phase short-circuit currents before and after series reactor installation is shown in Figure 5.

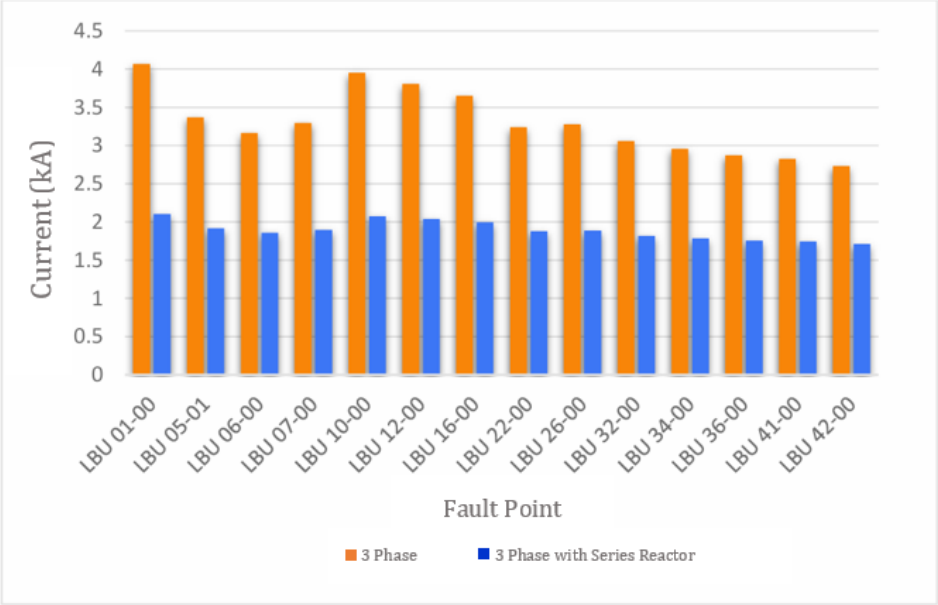

Figure 5. Comparison Graph of Three-Phase Short-Circuit Currents With and Without Series Reactor

3.3. Discussion Of System Performance

In addition to reducing short-circuit currents, the installation of a series reactor can also improve the reliability of the protection system by reducing thermal and mechanical stress on electrical equipment. With lower fault currents, the risk of damage to transformers, conductors, and circuit breakers can be minimized. The effect of conductor impedance on short-circuit current has also been discussed in previous electric power distribution studies [10].

However, the installation of a series reactor may also cause voltage drops under normal operating conditions due to the additional system impedance. Therefore, the selection of the reactor reactance value must consider the balance between the effectiveness of short-circuit current limitation and the voltage quality of the distribution system. The obtained results are consistent with recent studies on medium-voltage distribution systems using ETAP-based short-circuit simulations and current limiting techniques [14], [15].

4. Conclusion

This study investigated short-circuit current characteristics in the 20 kV Ulee Kareng distribution feeder and evaluated the effectiveness of a series reactor using ETAP simulations based on the IEC 60909 standard. The results showed that the maximum three-phase short-circuit current before reactor installation was 4.066 kA at bus LBU 01-00. After installing a 3.12 Ω series reactor, the current decreased to 2.103 kA, corresponding to a reduction of up to 48%.

The findings confirm that the series reactor effectively limits fault currents for various fault types and improves the reliability and performance of protection systems in medium-voltage distribution networks. The main contribution of this study lies in demonstrating a practical and cost-effective method for short-circuit current limitation under actual operating conditions of the Ulee Kareng distribution feeder. The proposed approach can serve as an alternative to replacing

existing circuit breakers with higher interrupting capacities in electrical power distribution systems.

ACKNOWLEDGMENTS

The authors would like to express their sincere gratitude to PT PLN (Persero) Aceh Regional Office, Banda Aceh Branch, for providing the data used in this research.

REFERENCES

[1] A. R. van C. Warrington, Protective Relays: Their Theory and Practice. London: Chapman and Hall, 2012.

[2] A. Kadir, Distribusi dan Utilisasi Tenaga Listrik. Jakarta: Universitas Indonesia, 2000.

[3] D. Suswanto, Analisis Gangguan pada Jaringan Distribusi. Padang: Universitas Negeri Padang, 2009.

[4] I. N. G. Kuswara, "Analisis Penempatan Reaktor Seri untuk Membatasi Arus Hubung Singkat di Gardu Induk Pandan," Institut Teknologi Nasional Malang, 2017.

[5] E. Ervianto, "Analisis Menentukan Penggunaan Reaktor Pembatas Arus di PT. Pulp and Paper," JTEV (Jurnal Teknik Elektro dan Vokasional), vol. 5, no. 1.1, pp. 27–31, 2019.

[6] H. Saadat, Power System Analysis, 3rd ed. New York: McGraw-Hill, 2010.

[7] IEC 60909, "Short-Circuit Currents in Three-Phase AC Systems," International Electrotechnical Commission, 2016.

[8] P. Kundur, Power System Stability and Control. New York: McGraw-Hill, 1994.

[9] J. J. Grainger and W. D. Stevenson, Power System Analysis. New York: McGraw-Hill, 1994.

[10] M. Fayyadl, T. Sukmadi, dan B. Winardi, "Rekonfigurasi Jaringan Distribusi Daya Listrik dengan Metode Algoritma Genetika," Jurusan Teknik Elektro, Fakultas Teknik Universitas Diponegoro, 2011.

[11] M. A. Hannan, P. J. Ker, M. S. H. Lipu, et al., "Short-Circuit Current Limitation Techniques in Modern Power Distribution Systems: A Review, "*IEEE Access*, vol. 9, pp. 134985–135006, 2021.

[12] S. Kamel, M. Ebeed, and J. Yu, "Optimal Allocation of Fault Current Limiters in Distribution Networks Considering Protection Coordination, "*Electric Power Systems Research*, vol. 196, 2021.

[13] A. M. Elmitwally and S. Ahmed, "Application of Current Limiting Reactors for Enhancing Distribution System Protection, "*International Journal of Electrical Power & Energy Systems*, vol. 133, 2021.

[14] Y. Wang, X. Liang, and J. Li, "Fault Current Analysis and Limitation in Medium-Voltage Distribution Networks Using ETAP,"*Energy Reports*, vol. 8, pp. 1152–1161, 2022.

[15] R. Benato and F. Dughiero, "Series Reactor Design for Short-Circuit Current Reduction in Distribution Systems, "*Energies*, vol. 15, no. 9, 2022.